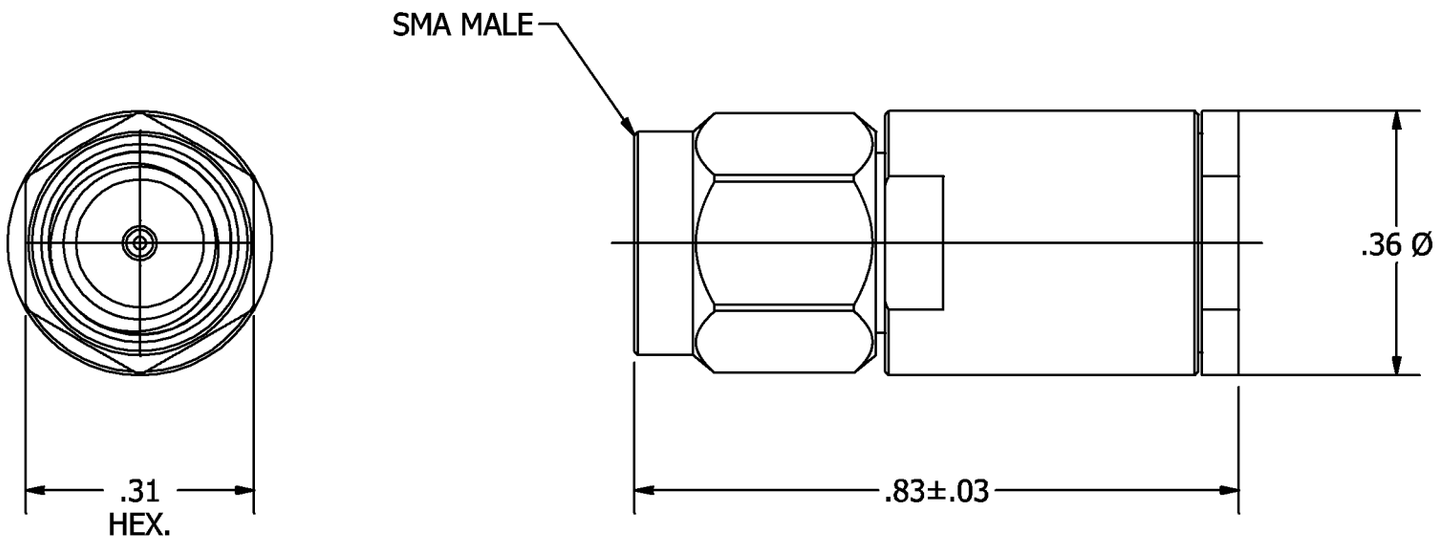


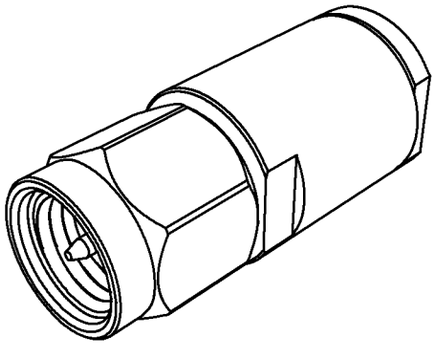

| REV | ECN | DATE | BY | APPR |
|---|---|---|---|---|
| - | ISSUED | 12-22-2023 | GM | TRS |
| A | 33324 | 4-19-2024 | JZ | JZ |

**JFW INDUSTRIES, INC.**

*www.jfwindustries.com* PH: 317-887-1340

MATERIAL: BODY: STEEL / CONNECTOR: BRASS

FINISH: BODY: PASSIVATED / CONNECTOR: GOLD

MODEL: 50T-XXX SMA M

SCALE: x4

DESCRIPTION: 2 WATT TERMINATION

PROPRIETARY INFORMATION

ALL SURFACES ARE TO BE FREE OF BURRS, PITS & SCRATCHES

TOLERANCES
.XX±.010 .XXX±.005 XX°±.5°

DWG # 092-10217-01