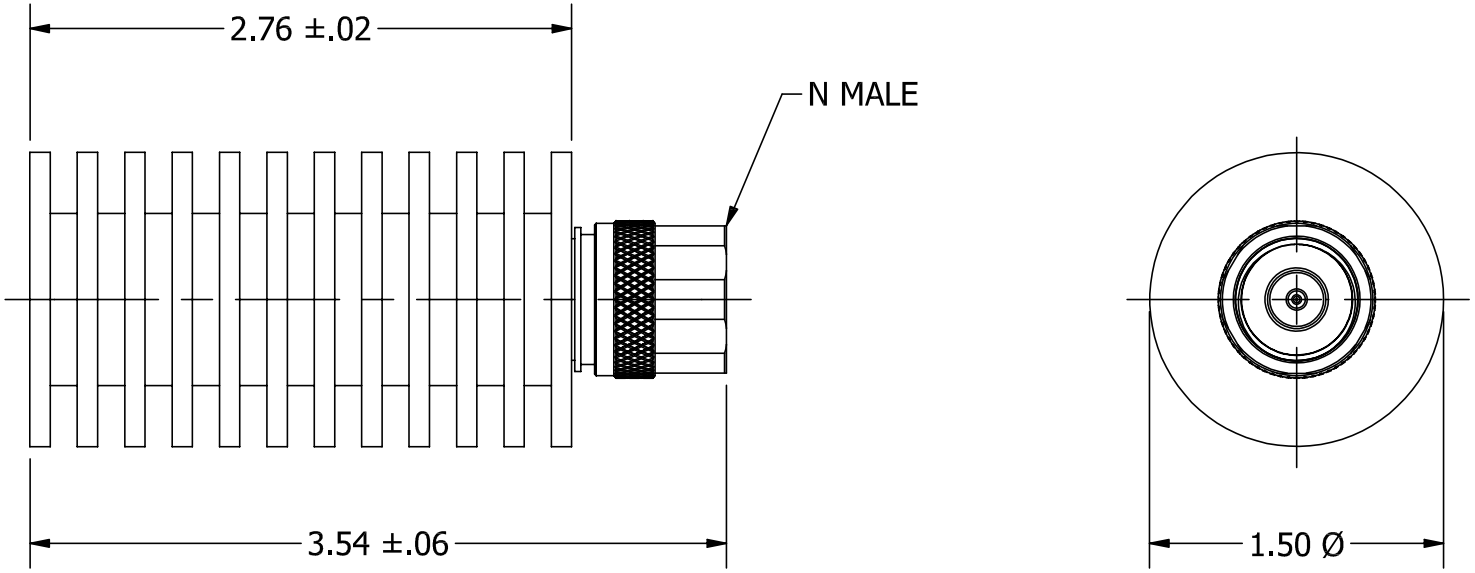

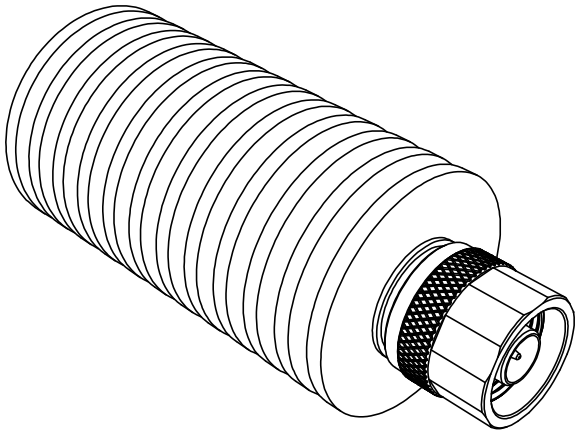

REV	ECN	DATE	BY	APPR
-	ISSUED	9-11-2023	GM	JZ
A	32900	10-4-2023	GM	JZ

JFW INDUSTRIES, INC.

www.jfwindustries.com PH: 317-887-1340

MATERIAL: BODY: ALUMINUM / CONNECTOR: BRASS

PROPRIETARY INFORMATION

FINISH: BODY: BLACK ANODIZE / CONNECTOR: TRI-METAL ALLOY

ALL SURFACES ARE TO BE FREE OF BURRS, PITS & SCRATCHES

MODEL: 50T-708 N M

SCALE: FULL

TOLERANCES .XX±.010 .XXX±.005 XX°±.5°

DESCRIPTION: 30 WATT TERMINATION

DWG #: 092-10146-01