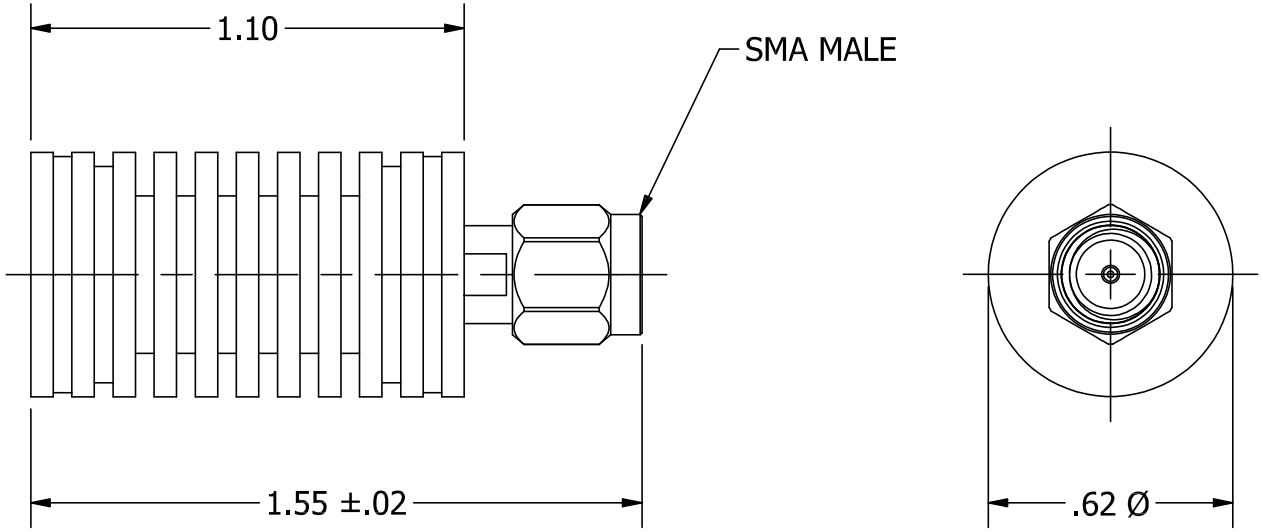

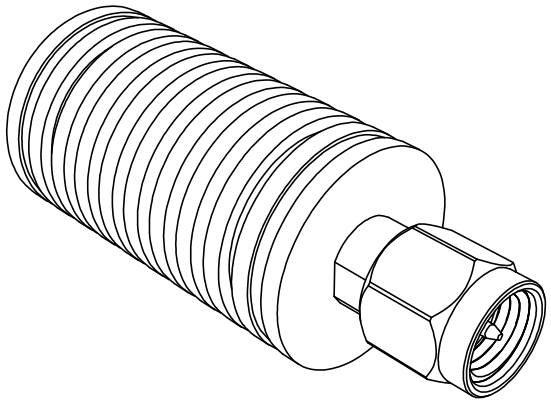

REV	ECN	DATE	BY	APPR
-	ISSUED	7-19-2023	JZ	TRS
A	32900	10-4-2023	GM	JZ

JFW INDUSTRIES, INC.

www.jfwindustries.com PH: 317-887-1340

MATERIAL: BODY: ALUMINUM / CONNECTOR: STAINLESS STEEL

PROPRIETARY INFORMATION

FINISH: BODY: BLACK ANODIZE / CONNECTOR: PASSIVATED

ALL SURFACES ARE TO BE FREE OF BURRS, PITS & SCRATCHES

MODEL: 50T-699 SMA M

SCALE: x2

TOLERANCES: .XX±.010 .XXX±.005 XX°±.5°

DESCRIPTION: 10 WATT TERMINATION

DWG #: 092-10101