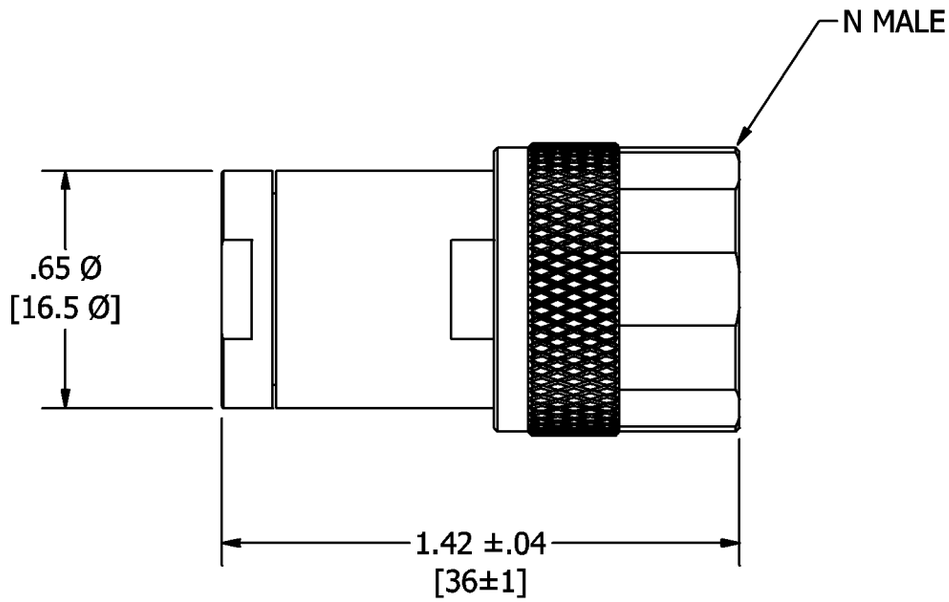

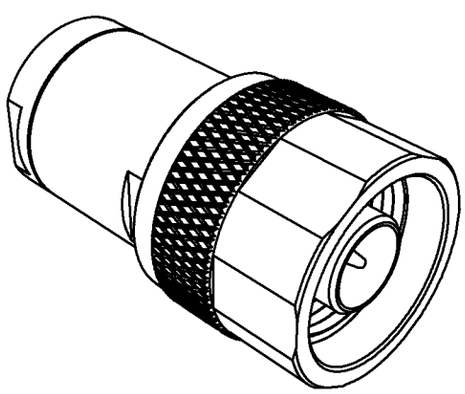

NOTE: DIMENSIONS ARE IN INCHES [MILLITMETERS]

REV	ECN	DATE	BY	APPR
-	ISSUED	6-6-2023	GM	JZ

JFW INDUSTRIES, INC.

www.jfwindustries.com PH: 317-887-1340

MATERIAL	BODY: BRASS CONTACT: BRASS	PROPRIETARY INFORMATION
FINISH	BODY: TRI-METAL ALLOY CONTACT: GOLD	ALL SURFACES ARE TO BE FREE OF BURRS, PITS & SCRATCHES
MODEL 50T-692	SCALE x2	TOLERANCES .XX±.010 .XXX±.005 XX°±.5°
DESCRIPTION 5 WATT TERMINATION		DWG # 092-10068